bq51013EVM-725 Evaluation Module

The bqTESLA™ wireless power evaluation kit from Texas Instruments is a high-performance, easy-to-use development kit for the design of wireless power solutions. Consisting of a single-channel transmitter and 5-V power supply receiver and associated magnetics, the kit enables designers to speed the development of their end-applications.

Contents

1 Applications 2
2 bq51013EVM-725 Electrical Performance Specifications 2
3 Modifications 2
4 Connector and Test Point Descriptions 2
4.1 Input/Output Connections 2
4.2 Jumpers/Switches 3
4.3 Test Point Descriptions 3
5 Schematic and Bill of Materials 5
6 Test Setup 7
6.1 Equipment 7
6.2 Equipment Setup 7
6.3 Load Step 8
6.4 Load Dump 9
6.5 V-Adapter Input 10
6.6 Start-Up 10
6.7 Disable Shutdown 11
7 bq51013EVM-725 Assembly Drawings and Layout 12
8 Reference 16

List of Figures

1 HPA725EVM Schematic 5
2 Equipment Setup 8
3 Load Step 9
4 Load Dump 9
5 V-Adapter Input 10
6 Start-Up 11
7 Equipment Shutdown Wireless Disable 11
8 bq51013EVM-725 Efficiency vs Output Power 12
9 Top Assembly 13
10 Top Copper Layer 14
11 Bottom Copper Layer 15
12 Bottom Assembly 16

List of Tables

1 bq51013EVM-725 Electrical Performance Specifications 2
2 Bill of Materials 6

bqTESLA is a trademark of Texas Instruments.

© 2011, Texas Instruments Incorporated

1 Applications

The bq51013EVM-725 evaluation module (EVM) demonstrates the receiver portion of the bqTESLA™ wireless power system. This receiver EVM is a complete receiver-side solution that produces 5 V out at up to 1 A when coupled with the bqTESLA™ transmitter. The bq51013EVM-725 device shown on this EVM along with external components that support the device for a complete solution.

- The bqTESLA™ receiver can be used in any number of low-power battery portable devices as a power source for charging. With contact-free charging capability, no connections to the device are needed.
- Output voltage of 5 V up to 1 A
- External adapter switchover and control circuit
- Low-profile, external pick-up coil
- Frame is configured to provide correct receiver to transmitter spacing.
- Room above coil for testing with battery, key for tuning

2 bq51013EVM-725 Electrical Performance Specifications

Table 1 provides a summary of the bq51013EVM-725 performance specifications. All specifications are given for an ambient temperature of 25°C.

Table 1. bq51013EVM-725 Electrical Performance Specifications

Parameter		Notes and Conditions	Min	Typ	Max	Unit
INPUT CHARACTERISTICS						
V_{IN}	Input Voltage	Typical V-rectified voltage at TP12	4	5.5	8	V
$V_{ADAPTER}$	Adapter Input Voltage		4		20	V
OVP	Input Overvoltage Protection	Voltage at V-rectified		15		V
OUTPUT CHARACTERISTICS						
V_{OUT}	V J3 to J4			5		V
I_{OUT}	I J3			1		A
SYSTEMS CHARACTERISTICS						
F_S	Switching Frequency		110		205	kHz
Eff	Efficiency	Output Current 500 mA		74		%

3 Modifications

See the data sheet (SLVSAT9) when changing components. To aid in such customization of the EVM, the board was designed with devices having 0603 or larger footprints. A real implementation likely occupies less total board space.

Note that changing components can improve or degrade EVM performance.

4 Connector and Test Point Descriptions

4.1 Input/Output Connections

The connections points are described in the following paragraphs.

4.1.1 J1 – AD External Adapter Input, J2-GND

Power can be provided to simulate an external adapter applied to the receiver. When this is done, an End Power Transfer signal is sent to the transmitter which enters a low power state. External adapter voltage must be a minimum of 4 V but not exceed 20V.

4.1.2 J3 – Output Voltage, J4-GND

Output voltage is 5 V with a possible current of up to 1 A.

© 2011, Texas Instruments Incorporated

4.1.3 J6 – Programming Connector

This connector is unpopulated and is only useful at factory level.

4.2 Jumpers/Switches

The control jumpers are described in the following paragraphs.

4.2.1 JP1 – EN1 Enable 1

One of two Enable signals that controls the Adapter and Wireless power transfer. Low on EN1 enables the wireless power transfer; High disables the wireless power transfer. The Default Shorting jumper setting is Low.

4.2.2 JP2 – EN2 Enable 2

One of two Enable signals that controls the Adapter and Wireless power transfer. Low on EN2 enables the adapter power transfer; High disables the adapter power transfer. Default Shorting jumper setting is Low.

4.2.3 JP3 – TS Enable or Disable

This jumper enables the TS adjustment feature using R3. The Disable position sets voltage at the TS pin to a safe value. The Default Shorting jumper setting is disabled

4.3 Test Point Descriptions

The test points are described in the following paragraphs.

4.3.1 TP1 – AD_EN

This push-pull driver for the external PFET connects the Adapter and the Output from the bq51013.

4.3.2 TP2 – AC Input 2

This is the test point for measuring ac voltage applied to the EVM from the receiver coil.

4.3.3 TP3 – Com2 Communication 2 Drive

Communication driver signal, open-drain output connected to communication capacitor.

4.3.4 TP4 – AC Input 1

This is the test point for measuring ac voltage applied to the EVM from the receiver coil.

4.3.5 TP5 – CLMP 1

Overvoltage clamp driver signal, open-drain output is connected to OVP capacitor.

4.3.6 TP6 – CLMP 2

Overvoltage clamp drive signal, open-drain output is connected to OVP capacitor.

4.3.7 TP7 – OUT Output Voltage

This test point is the output voltage from the bq51013 or the Adapter input.

4.3.8 TP8 – Boot-1 Boot Capacitor

This Bootstrap capacitor 1 drive connects to the integrated circuit (IC).

© 2011, Texas Instruments Incorporated

4.3.9 TP9 – Boot-2 Boot Capacitor

This bootstrap capacitor 2 drive connects to the IC.

4.3.10 TP10 – CHG Charge

This output signal indicates that the output current is being delivered to OUT, the open-drain output.

4.3.11 TP11 – AC1 IC input

This is the ac input to the IC from series capacitors.

4.3.12 TP12 – Rectified Voltage

The input ac voltage is rectified into unregulated dc voltage; additional capacitance is used to filter the voltage before the regulator.

4.3.13 TP13, TP14, TP15 – GND

These are the ground test points.

4.3.14 TP16 – TS Temp Sensor

This is the connection point for external thermistor; see the data sheet for additional information.

© 2011, Texas Instruments Incorporated

5 Schematic and Bill of Materials

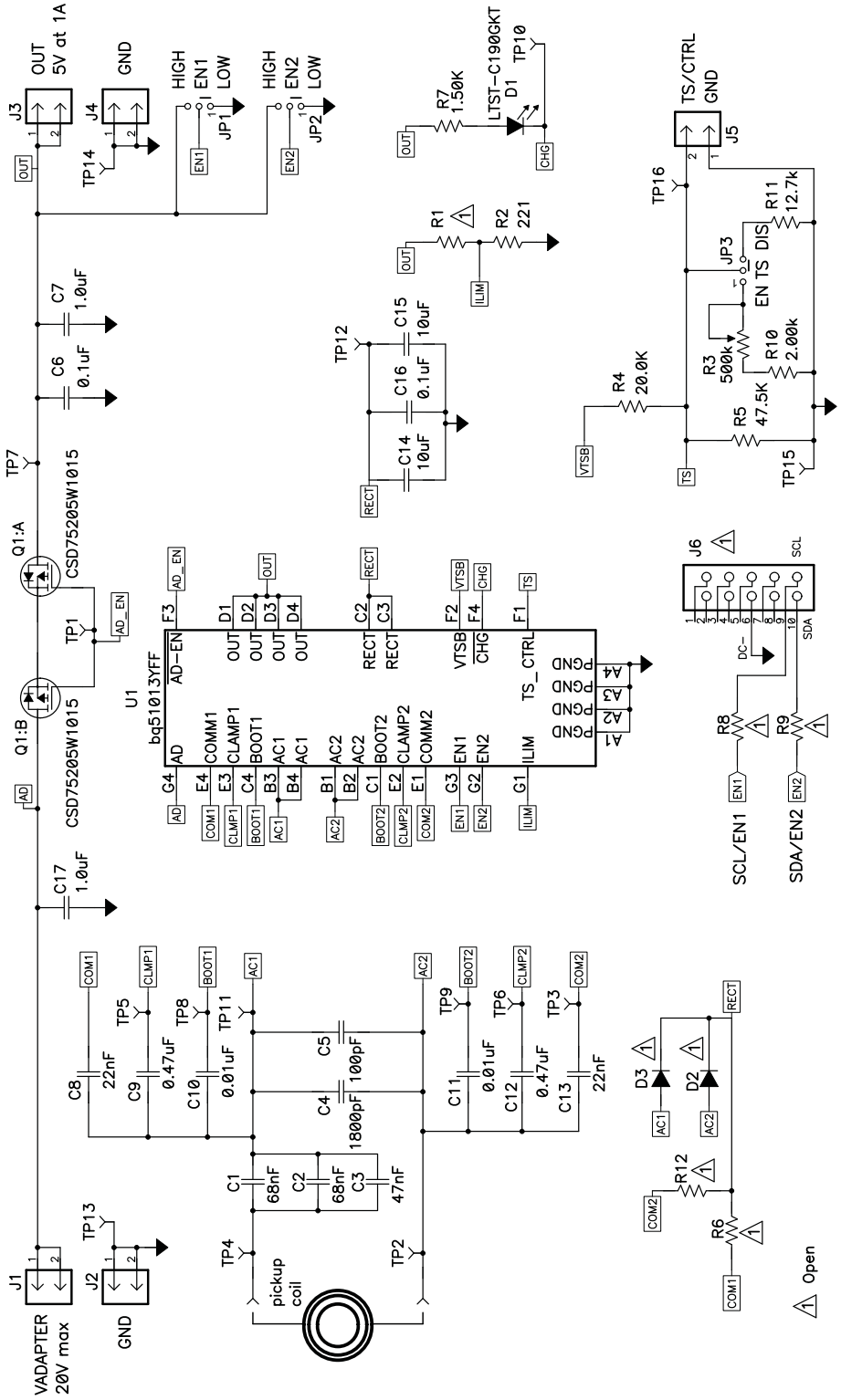

NOTE: For Reference Only, See Table 2 for Specific Values

Figure 1. HPA725EVM Schematic

© 2011, Texas Instruments Incorporated

Table 2. Bill of Materials

Qty	RefDes	Value	Description	Size	Part Number	MFR		
2	C1, C2	68 nF	Capacitor, Ceramic, 50V, X7R, 10%	0603	Std	Std		
1	C3	47 nF	Capacitor, Ceramic, 50V, X7R, 10%	0603	Std	Std		
1	C4	1800 pF	Capacitor, Ceramic, 50V, X7R, 10%	0603	Std	Std		
1	C5	100 pF	Capacitor, Ceramic, 50V, C0G, 5%	0603	Std	Std		
2	C6, C16	0.1 µF	Capacitor, Ceramic, 50V, X7R, 10%	0603	Std	Std		
2	C7, C17	0.1 µF	Capacitor, Ceramic, 50V, X5R, 10%	0805	Std	Std		
2	C8, C13	22 nF	Capacitor, Ceramic, 50V, X7R, 10%	0603	Std	Std		
2	C9, C12	0.47 µF	Capacitor, Ceramic, 25V, X5R, 10%	0603	Std	Std		
2	C10, C11	0.01 µF	Capacitor, Ceramic, 50V, X7R, 10%	0603	Std	Std		
2	C14, C15	10 µF	Capacitor, Ceramic, 25V, X5R, 10%	1206	Std	Std		
1	D1	LTST-C190GKT	Diode, LED, Green, 2.1-V, 20-mA, 6-mcd	0603	LTST-C190GKT	Lite On		
0	D2, D3	Open	Diode, Schottky, 2A, 20V	POWERLITE123	SMD22PL-TP	Micro Commercial Components		
1	Q1	CSD75205W1015	MOSFET, Dual PChan, -20V, 1.2A, 190 mΩ	CSP 1x1.5mm	CSD75205W1015	TI		
0	R1, R8, R9	Open	Resistor, Chip, 1/16W, 1%	0603	Std	Std		
1	R2	221	Resistor, Chip, 1/16W, 1%	0603	Std	Std		
1	R3	500k	Potentiometer, 1/4 in. Cermet, 12-Turn, Top-Adjust	0.25x0.17	3266W-1-504LF	Bourns		
1	R4	20.0K	Resistor, Chip, 1/16W, 1%	0603	Std	Std		
1	R5	47.5K	Resistor, Chip, 1/16W, 1%	0603	Std	Std		
0	R6, R12	Open	Resistor, Metal Film, 1/4 watt, ± 1%	1206	CRCW120624R0FKEA	Vishay		
1	R7	1.50K	Resistor, Chip, 1/16W, 1%	0603	Std	Std		
1	R10	2.00k	Resistor, Chip, 1/16W, 1%	0603	Std	Std		
1	R11	12.7k	Resistor, Chip, 1/16W, 1%	0603	Std	Std		
1	U1	bq51013YFF	IC, Wireless Secondary-Side Power Controller and Battery Charge	DSBGA	bq51013YFF	TI		
1			Case Modified Polycase LP-11B with 4 screws		J-6838A	Polycase		
1			Receiver Coil		IWAS-4832FF-50	Vishay		

© 2011, Texas Instruments Incorporated

6 Test Setup

6.1 Equipment

6.1.1 bqTESLA™ Transmitter

Power for the bq51013EVM-725 receiver EVM is supplied through a bqTESLA™ transmitter or WPC-certified transmitter. The input ac voltage is applied to the receiver through the coil located in the receiver bottom.

6.1.2 Voltage Source

Input power supply to the bqTESLA™ transmitter is typically 19 Vdc ±200 mV at 500 mA maximum, but consult transmitter specification. To simulate an external adapter, an additional 5 V at the 1-A power supply is used.

6.1.3 Meters

Output voltage can be monitored at TP7 with a voltmeter. Input current into the load must be monitored with an appropriate ammeter. Transmitter input current and voltage can be monitored also but the meter must use averaging function for reducing error due to communications packets.

6.1.4 Loads

A single load is required for 5 V with a maximum current of 1 A. The load can be resistive or electronic.

6.1.5 Oscilloscope

A multichannel oscilloscope with appropriate probes is used to observe the RECT voltage at TP12 and other signals.

6.1.6 Recommended Wire Gauge

For proper operation, 22 AWG wire is recommended when connecting the bq51013EVM-725EVM to loads.

6.2 Equipment Setup

- With the power supply off, connect supply to the bqTESLA™ transmitter.
- Place the bqTESLA™ receiver on the transmitter.
- Connect load to J3 with return to J4, monitor current through load with ammeter, and monitor current to load at TP7.
- Typical output voltage is 5 V, and the output current range is 0 mA to 1 A.

6.2.1 Equipment Setup Diagram

The diagram of Figure 2 shows the equipment test setup.

© 2011, Texas Instruments Incorporated

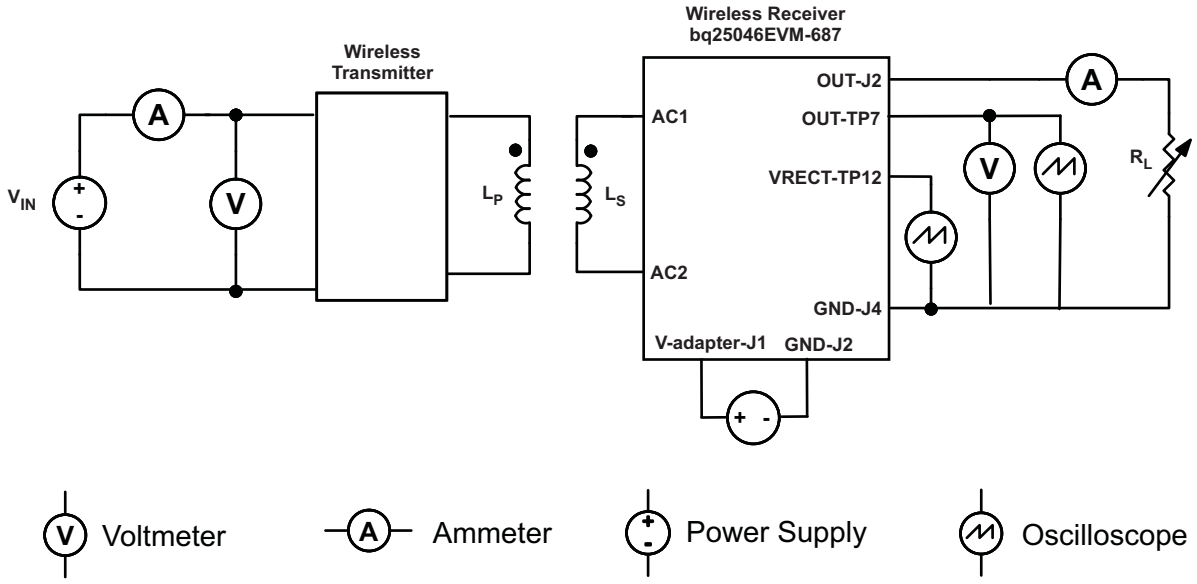

Figure 2. Equipment Setup

6.2.2 EVM Setup Procedures

This section guides the user through a few general test procedures to exercise the functionality of the presented hardware. A few key notes:

- To probe the output voltage of the receiver, connect the probe to TP7.
- To probe the rectifier voltage, connect the probe to TP12.
- The V-adapter supply which simulates an external adapter is connected to J1.
- All voltmeters must be Kelvin connected (at the pin) to the point of interest.
- The output load is recommended to be a variable power resistor or electronic load.

6.3 Load Step

The procedure for load step is as follows:

- Set up the test bench as described in Section 6.2.
- Power TX with 19 V.
- Provide a load step from no load (high impedance) to 10 Ω or 500 mA (if using a current source load).
- Monitor load current, rectifier voltage, and output voltage as shown in the following illustrations.

© 2011, Texas Instruments Incorporated

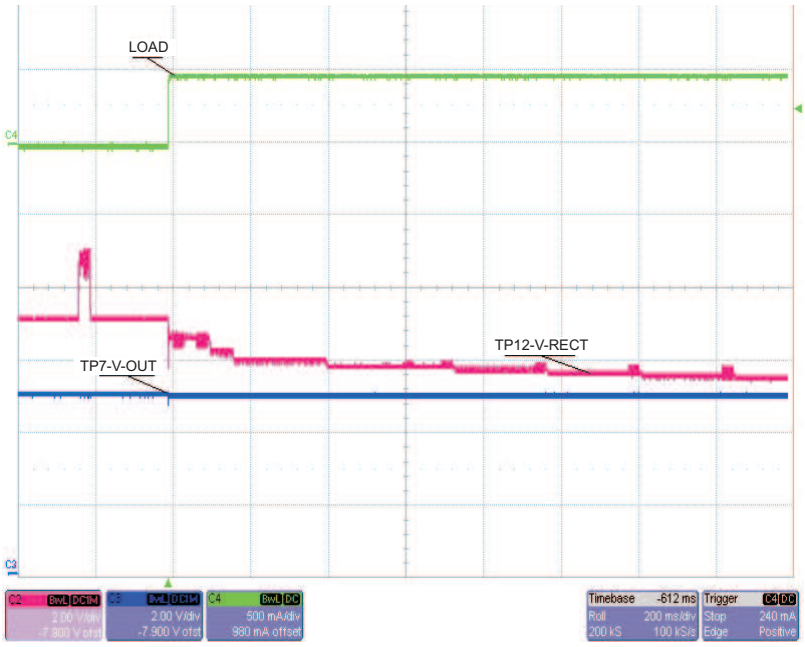

Figure 3. Load Step

6.4 Load Dump

The procedure for load dump is as follows:

- Set up the test bench as described in Section 6.2.
- Power TX with 19 V.
- Provide a load dump from 10 Ω or 500 mA (if using a current source load) to no load (high impedance).
- Monitor load current, rectifier voltage, and output voltage as shown in the following illustration.

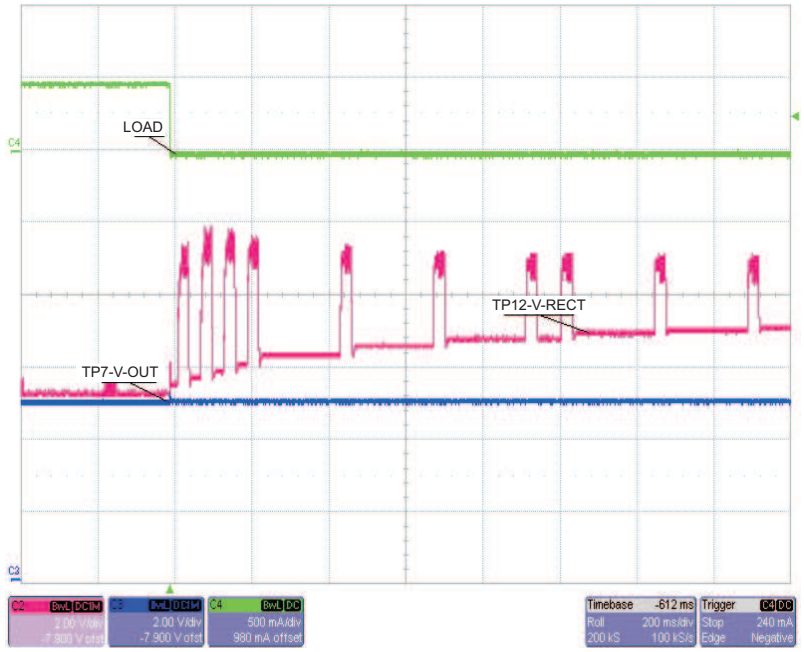

Figure 4. Load Dump

© 2011, Texas Instruments Incorporated

6.5 V-Adapter Input

The procedure for external adapter (wired adapter) testing is as follows:

- Set up the test bench as described in Section 6.2.
- Power TX with 19 V.
- Load output (the following was loaded with a X-Ω resistor).
- Apply a 6-V V-adapter input voltage.
- Monitor load current, rectifier voltage, output voltage, and V-adapter voltage as shown in the following illustration.

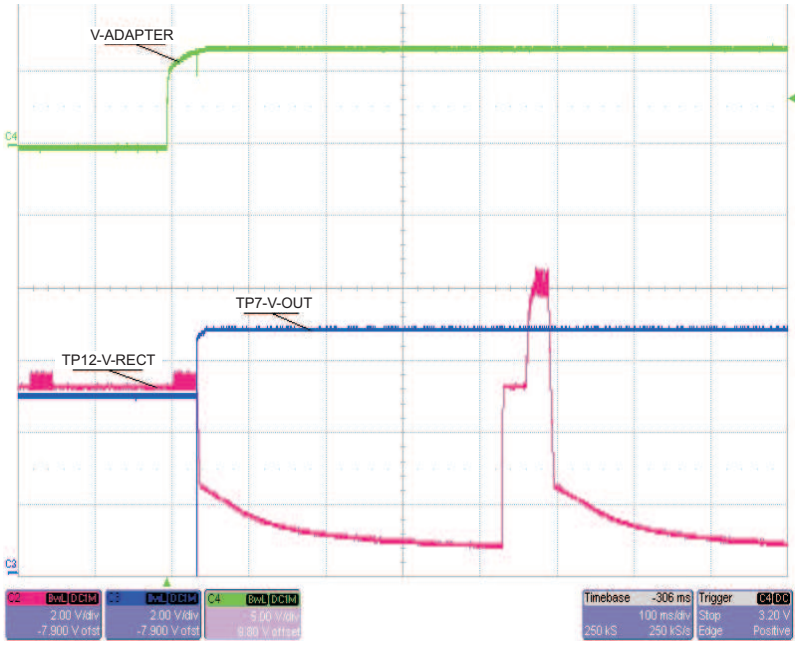

Figure 5. V-Adapter Input

6.6 Start-Up

The procedure demonstrates start-up:

- Set up the test bench as described in Section 6.2.
- Power TX with 19 V.
- Trigger scope sweep on TP2 AC IN.

© 2011, Texas Instruments Incorporated

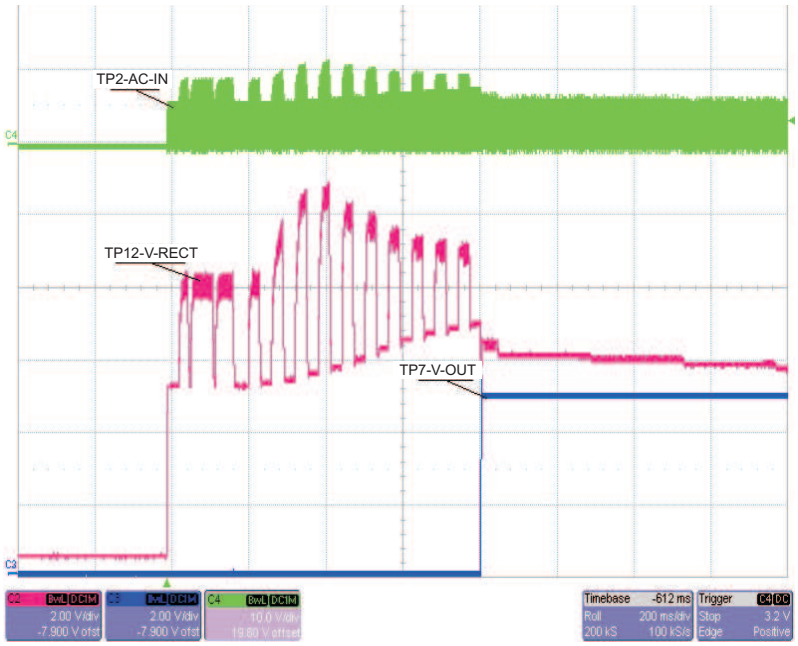

Figure 6. Start-Up

6.7 Disable Shutdown

The jumper JP2 (EN2)sends an End Power Transfer to Transmitter, Shutdown:

- With unit operating normally, move jumper JP2 from Low to High position.
- LED D1 turn OFF; output voltage drops to 0 V.
- Return jumper to Low position, RX restarts.

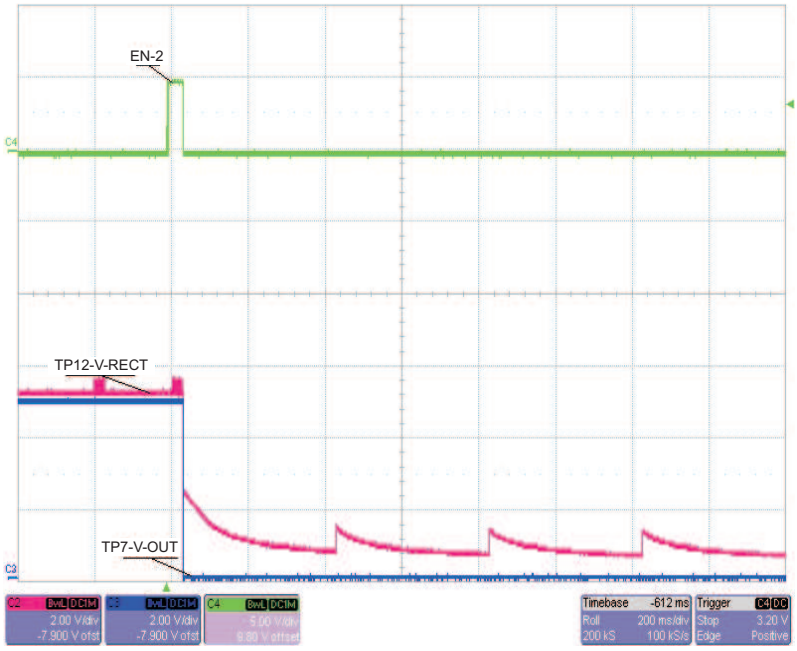

Figure 7. Equipment Shutdown Wireless Disable

© 2011, Texas Instruments Incorporated

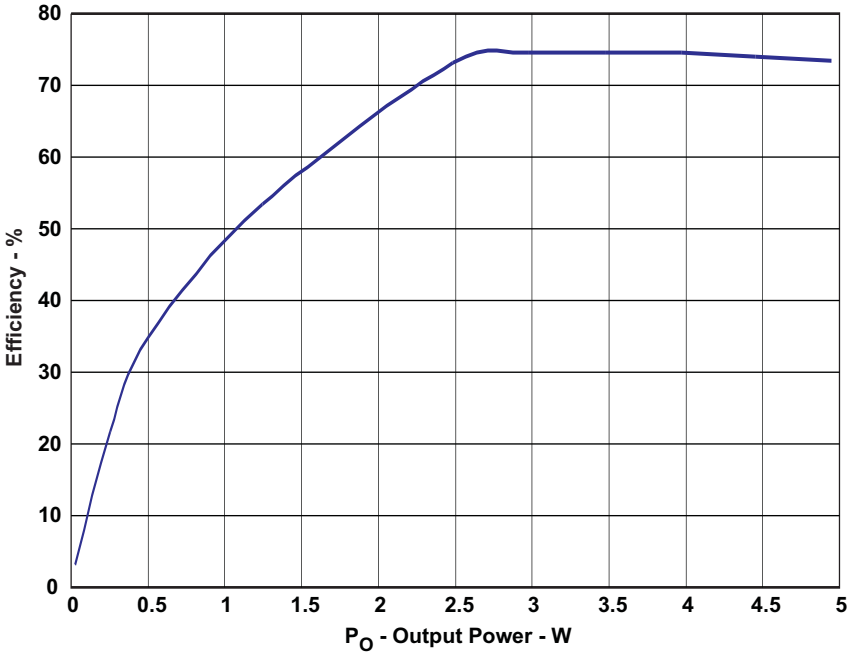

Figure 8. bq51013EVM-725 Efficiency vs Output Power

7 bq51013EVM-725 Assembly Drawings and Layout

The following figures (Figure 9 through Figure 12) show the design of the bq51013EVM-725 printed-circuit board (PCB). The EVM has been designed using a 2-layer, 2-oz, copper-clad PCB, 2.1-in. × 2.1-in. area to provide the user easy viewing, probing, and evaluating of the bq51013 IC in a practical double-sided application. Moving components to both sides of the PCB or using additional internal layers can offer additional size reduction for space-constrained systems.

© 2011, Texas Instruments Incorporated

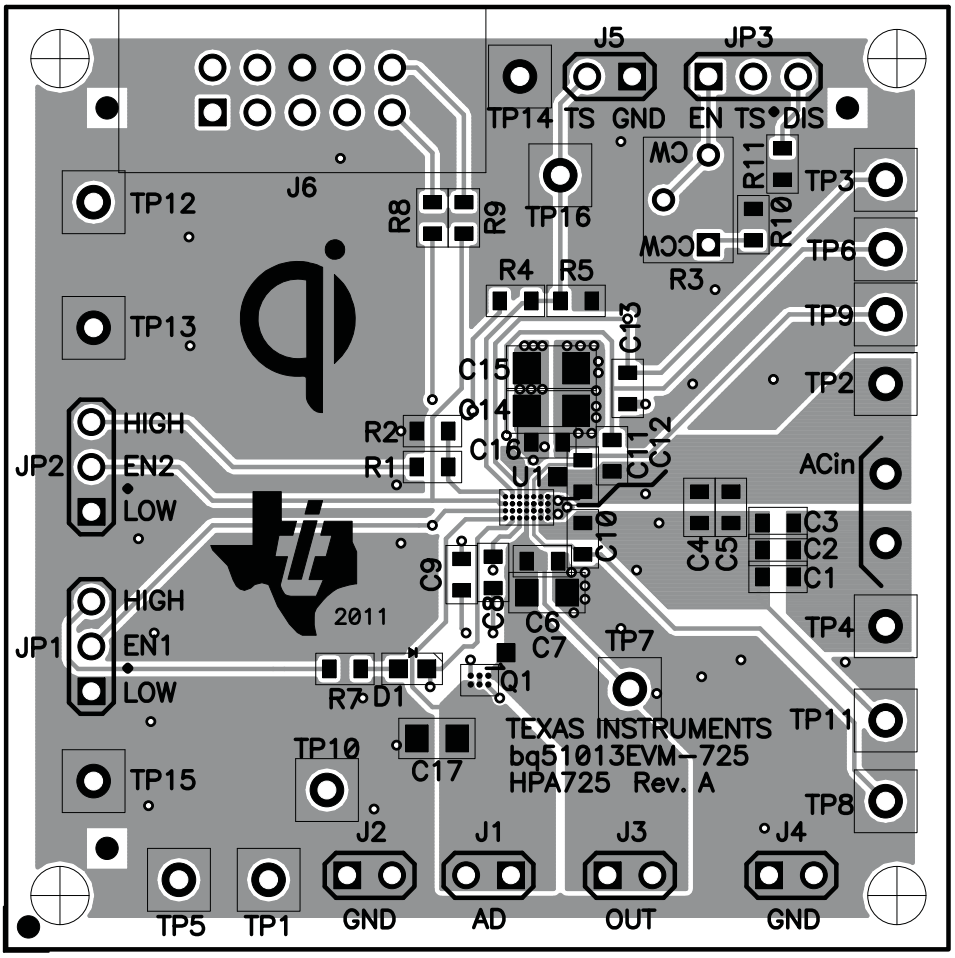

Figure 9. Top Assembly

© 2011, Texas Instruments Incorporated

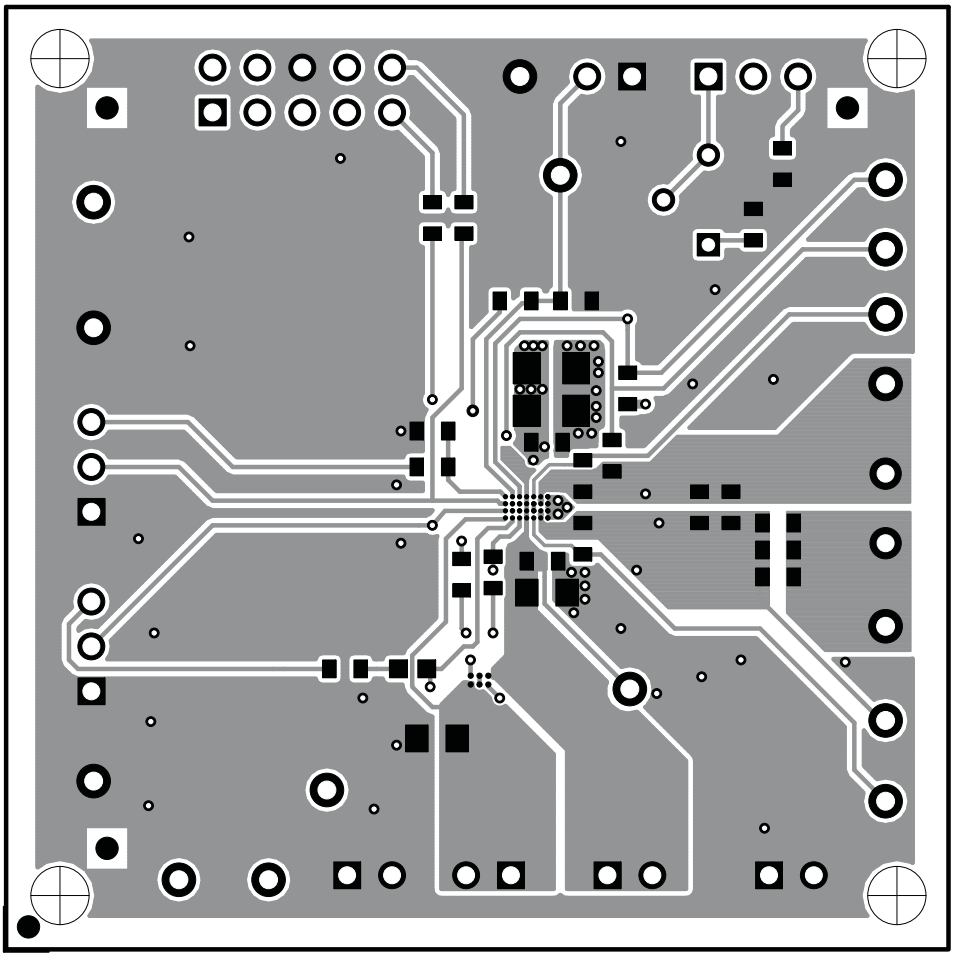

Figure 10. Top Copper Layer

© 2011, Texas Instruments Incorporated

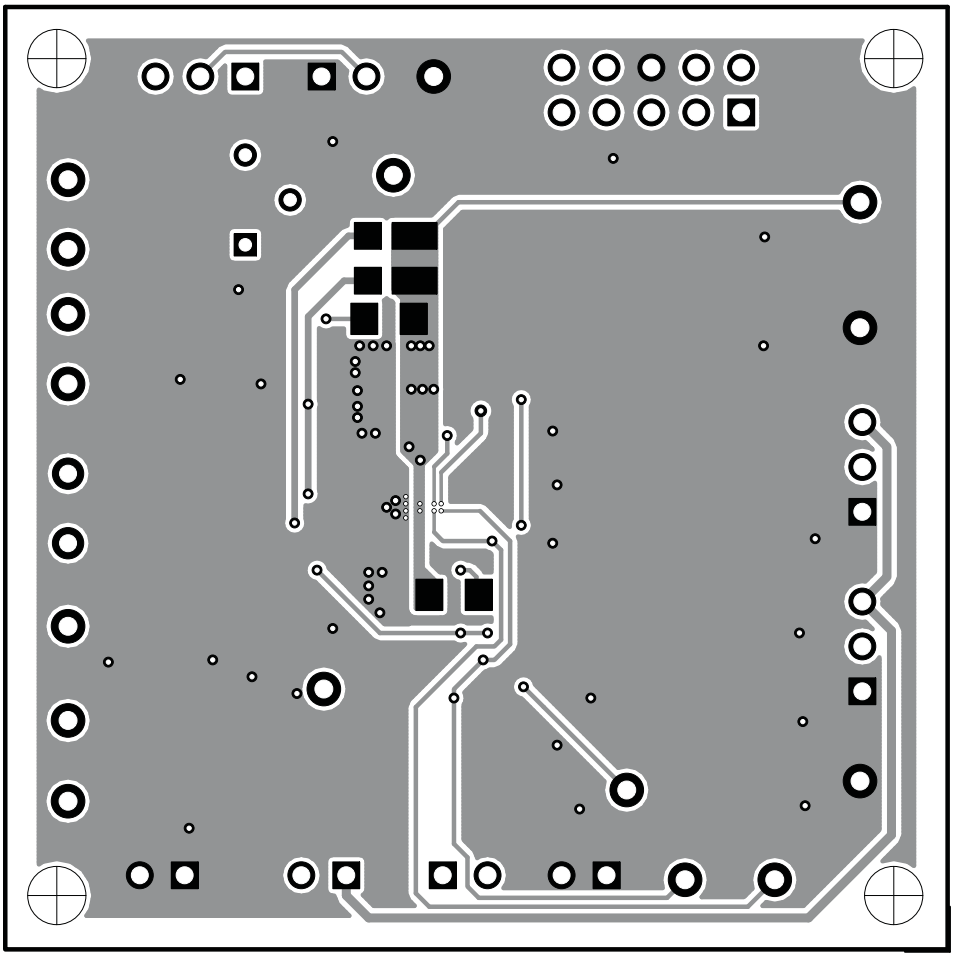

Figure 11. Bottom Copper Layer

© 2011, Texas Instruments Incorporated

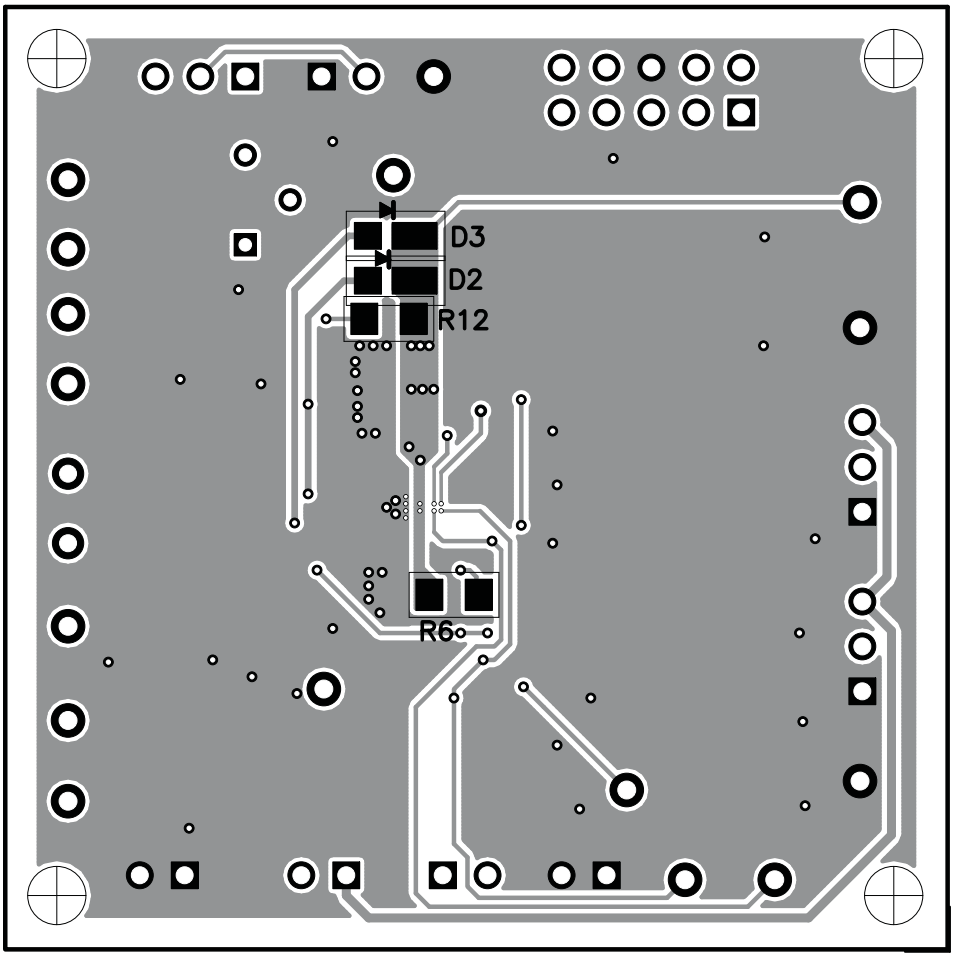

Figure 12. Bottom Assembly

8 Reference

For additional information about the bqTESLA100LP low-power, wireless, power evaluation kit from Texas Instruments, visit the product folder on the TI Web site at http://focus.ti.com/docs/toolsw/folders/print/bqtesla100lp.html.

© 2011, Texas Instruments Incorporated

Evaluation Board/Kit Important Notice

Texas Instruments (TI) provides the enclosed product(s) under the following conditions:

This evaluation board/kit is intended for use for **ENGINEERING DEVELOPMENT, DEMONSTRATION, OR EVALUATION PURPOSES ONLY** and is not considered by TI to be a finished end-product fit for general consumer use. Persons handling the product(s) must have electronics training and observe good engineering practice standards. As such, the goods being provided are not intended to be complete in terms of required design-, marketing-, and/or manufacturing-related protective considerations, including product safety and environmental measures typically found in end products that incorporate such semiconductor components or circuit boards. This evaluation board/kit does not fall within the scope of the European Union directives regarding electromagnetic compatibility, restricted substances (RoHS), recycling (WEEE), FCC, CE or UL, and therefore may not meet the technical requirements of these directives or other related directives.

Should this evaluation board/kit not meet the specifications indicated in the User's Guide, the board/kit may be returned within 30 days from the date of delivery for a full refund. THE FOREGOING WARRANTY IS THE EXCLUSIVE WARRANTY MADE BY SELLER TO BUYER AND IS IN LIEU OF ALL OTHER WARRANTIES, EXPRESSED, IMPLIED, OR STATUTORY, INCLUDING ANY WARRANTY OF MERCHANTABILITY OR FITNESS FOR ANY PARTICULAR PURPOSE.

The user assumes all responsibility and liability for proper and safe handling of the goods. Further, the user indemnifies TI from all claims arising from the handling or use of the goods. Due to the open construction of the product, it is the user's responsibility to take any and all appropriate precautions with regard to electrostatic discharge.

EXCEPT TO THE EXTENT OF THE INDEMNITY SET FORTH ABOVE, NEITHER PARTY SHALL BE LIABLE TO THE OTHER FOR ANY INDIRECT, SPECIAL, INCIDENTAL, OR CONSEQUENTIAL DAMAGES.

TI currently deals with a variety of customers for products, and therefore our arrangement with the user **is not exclusive.**

TI assumes **no liability for applications assistance, customer product design, software performance, or infringement of patents or services described herein.**

Please read the User's Guide and, specifically, the Warnings and Restrictions notice in the User's Guide prior to handling the product. This notice contains important safety information about temperatures and voltages. For additional information on TI's environmental and/or safety programs, please contact the TI application engineer or visit www.ti.com/esh.

No license is granted under any patent right or other intellectual property right of TI covering or relating to any machine, process, or combination in which such TI products or services might be or are used.

FCC Warning

This evaluation board/kit is intended for use for **ENGINEERING DEVELOPMENT, DEMONSTRATION, OR EVALUATION PURPOSES ONLY** and is not considered by TI to be a finished end-product fit for general consumer use. It generates, uses, and can radiate radio frequency energy and has not been tested for compliance with the limits of computing devices pursuant to part 15 of FCC rules, which are designed to provide reasonable protection against radio frequency interference. Operation of this equipment in other environments may cause interference with radio communications, in which case the user at his own expense will be required to take whatever measures may be required to correct this interference.

EVM Warnings and Restrictions

It is important to operate this EVM within the input voltage range of 0 V to 8 V and the output voltage range of 0 V to 5 V .

Exceeding the specified input range may cause unexpected operation and/or irreversible damage to the EVM. If there are questions concerning the input range, please contact a TI field representative prior to connecting the input power.

Applying loads outside of the specified output range may result in unintended operation and/or possible permanent damage to the EVM. Please consult the EVM User's Guide prior to connecting any load to the EVM output. If there is uncertainty as to the load specification, please contact a TI field representative.

During normal operation, some circuit components may have case temperatures greater than 65°C. The EVM is designed to operate properly with certain components above 65°C as long as the input and output ranges are maintained. These components include but are not limited to linear regulators, switching transistors, pass transistors, and current sense resistors. These types of devices can be identified using the EVM schematic located in the EVM User's Guide. When placing measurement probes near these devices during operation, please be aware that these devices may be very warm to the touch.

Mailing Address: Texas Instruments, Post Office Box 655303, Dallas, Texas 75265
Copyright © 2011, Texas Instruments Incorporated

IMPORTANT NOTICE

Texas Instruments Incorporated and its subsidiaries (TI) reserve the right to make corrections, modifications, enhancements, improvements, and other changes to its products and services at any time and to discontinue any product or service without notice. Customers should obtain the latest relevant information before placing orders and should verify that such information is current and complete. All products are sold subject to TI's terms and conditions of sale supplied at the time of order acknowledgment.

TI warrants performance of its hardware products to the specifications applicable at the time of sale in accordance with TI's standard warranty. Testing and other quality control techniques are used to the extent TI deems necessary to support this warranty. Except where mandated by government requirements, testing of all parameters of each product is not necessarily performed.

TI assumes no liability for applications assistance or customer product design. Customers are responsible for their products and applications using TI components. To minimize the risks associated with customer products and applications, customers should provide adequate design and operating safeguards.

TI does not warrant or represent that any license, either express or implied, is granted under any TI patent right, copyright, mask work right, or other TI intellectual property right relating to any combination, machine, or process in which TI products or services are used. Information published by TI regarding third-party products or services does not constitute a license from TI to use such products or services or a warranty or endorsement thereof. Use of such information may require a license from a third party under the patents or other intellectual property of the third party, or a license from TI under the patents or other intellectual property of TI.

Reproduction of TI information in TI data books or data sheets is permissible only if reproduction is without alteration and is accompanied by all associated warranties, conditions, limitations, and notices. Reproduction of this information with alteration is an unfair and deceptive business practice. TI is not responsible or liable for such altered documentation. Information of third parties may be subject to additional restrictions.

Resale of TI products or services with statements different from or beyond the parameters stated by TI for that product or service voids all express and any implied warranties for the associated TI product or service and is an unfair and deceptive business practice. TI is not responsible or liable for any such statements.

TI products are not authorized for use in safety-critical applications (such as life support) where a failure of the TI product would reasonably be expected to cause severe personal injury or death, unless officers of the parties have executed an agreement specifically governing such use. Buyers represent that they have all necessary expertise in the safety and regulatory ramifications of their applications, and acknowledge and agree that they are solely responsible for all legal, regulatory and safety-related requirements concerning their products and any use of TI products in such safety-critical applications, notwithstanding any applications-related information or support that may be provided by TI. Further, Buyers must fully indemnify TI and its representatives against any damages arising out of the use of TI products in such safety-critical applications.

TI products are neither designed nor intended for use in military/aerospace applications or environments unless the TI products are specifically designated by TI as military-grade or "enhanced plastic." Only products designated by TI as military-grade meet military specifications. Buyers acknowledge and agree that any such use of TI products which TI has not designated as military-grade is solely at the Buyer's risk, and that they are solely responsible for compliance with all legal and regulatory requirements in connection with such use.

TI products are neither designed nor intended for use in automotive applications or environments unless the specific TI products are designated by TI as compliant with ISO/TS 16949 requirements. Buyers acknowledge and agree that, if they use any non-designated products in automotive applications, TI will not be responsible for any failure to meet such requirements.

Following are URLs where you can obtain information on other Texas Instruments products and application solutions:

Products		**Applications**	
Audio	www.ti.com/audio	Communications and Telecom	www.ti.com/communications
Amplifiers	amplifier.ti.com	Computers and Peripherals	www.ti.com/computers
Data Converters	dataconverter.ti.com	Consumer Electronics	www.ti.com/consumer-apps
DLP® Products	www.dlp.com	Energy and Lighting	www.ti.com/energy
DSP	dsp.ti.com	Industrial	www.ti.com/industrial
Clocks and Timers	www.ti.com/clocks	Medical	www.ti.com/medical
Interface	interface.ti.com	Security	www.ti.com/security
Logic	logic.ti.com	Space, Avionics and Defense	www.ti.com/space-avionics-defense
Power Mgmt	power.ti.com	Transportation and Automotive	www.ti.com/automotive
Microcontrollers	microcontroller.ti.com	Video and Imaging	www.ti.com/video
RFID	www.ti-rfid.com	Wireless	www.ti.com/wireless-apps
RF/IF and ZigBee® Solutions	www.ti.com/lprf		
	TI E2E Community Home Page		e2e.ti.com

Mailing Address: Texas Instruments, Post Office Box 655303, Dallas, Texas 75265
Copyright © 2011, Texas Instruments Incorporated